TamzMaths

The January Resit Pack

GCSE Mathematics – Numeracy (WJEC) · Intermediate and Higher tiers · for the January 2027 exams

- 4 full practice papers, 80 marks each, timed like the real thing
- Every answer, mark by mark (M1, A1, B1), and the mistake that loses the mark
- The 25 mistakes that cost resit students the most marks, fixed
- A 4-week plan, a topic checklist and a method sheet
- QR codes to free marked practice on tamzmaths.co.uk for every topic

How to use this pack

1. Do Paper 1 of your tier first, under exam conditions: 1 hour 45 minutes, no notes, no phone. Mark it with the mark scheme, one mark at a time.

2. Tick each topic on the checklist red, amber or green from what that paper showed you.

3. Read the 25 mistakes. Most resit students lose marks in the same places, and most of those marks are easy to win back.

4. Revise your red topics: scan the QR code beside each one for free questions on tamzmaths.co.uk that mark your working and tell you exactly where you went wrong.

5. Do Paper 2, then compare your marks.

The 4-week plan (about 30 minutes a day)

WEEK 1	Paper 1 (non-calculator) under timed conditions. Mark it. Fill in the checklist. Read mistakes 1 to 10.
WEEK 2	Your red topics: 3 a week, 20 minutes of practice each on the website. Read mistakes 11 to 25.
WEEK 3	Paper 2 (calculator), timed. Mark it. Re-do every question you dropped marks on, without looking.
WEEK 4	Amber topics, the method sheet, and the higher tier paper for stretch if you're on Intermediate. The night before: method sheet only, then sleep.

Your exam board is WJEC and your exam is the GCSE Mathematics – Numeracy. WJEC moved the November 2026 exams for this GCSE to January 2027. Check your exact dates and tier with your school or college.

Topic checklist

Colour each box after a paper: red = I dropped marks, amber = shaky, green = solid. Scan a code for free practice on that topic, marked step by step.

Number

- R A G Percentages, increase and decrease, reverse percentages
- R A G Wages, tax, VAT, bills, best buys, interest
- R A G Rounding, significant figures, estimating
- R A G Fractions of amounts
- R A G Ratio and proportion (direct and inverse)
- R A G Standard form and indices
- R A G Upper and lower bounds
- R A G HCF and LCM in context
- R A G Surds and recurring decimals (Higher)

Algebra and graphs

- R A G Sequences and nth term
- R A G Formulae: substitute and change the subject
- R A G Forming and solving equations
- R A G Travel, conversion and real-life graphs; rates; area under graphs (Higher)

Geometry and measures

- R A G Metric and imperial units, time, speed, density
- R A G Area, perimeter, volume, surface area; circles; sectors (Higher: cones, spheres, segments)
- R A G Pythagoras and right-angled trigonometry (Higher: sine and cosine rules)
- R A G Similar shapes and scale factors

R A G Scale drawings and bearings

R A G Plans, elevations and nets

Statistics and probability

R A G Mean, median, mode, range from lists and tables

R A G Sampling, bias, questionnaires (Higher: stratified)

R A G Pie charts, scatter graphs, cumulative frequency, box plots (Higher: histograms)

R A G Probability, two-way tables, Venn and tree diagrams

R A G Timetables and distance charts

Method sheet

Percentages

- Multiplier: up 15% → × 1.15, down 15% → × 0.85
- Reverse percentage: divide by the multiplier (never take the % off the new amount)
- Percentage change = change ÷ original × 100
- Compound interest: amount × $(1 + r/100)^n$
- AER: the actual yearly rate after compounding; compare AERs, not monthly rates

Money

- VAT is usually 20%; check the rate given in the question
- Keep the pence: write £12.50, not £12.5
- Read every charge: a standing charge is per day, not per bill

Units

- 1 m = 100 cm, 1 km = 1000 m, 1 kg = 1000 g, 1 litre = 1000 ml = 1000 cm^3
- 1 m^2 = 10 000 cm^2 · 1 m^3 = 1 000 000 cm^3
- Learn: 1 inch ≈ 2.5 cm, 1 mile ≈ 1.6 km, 1 kg ≈ 2.2 lb, 1 gallon ≈ 4.5 litres
- Speed = distance ÷ time · Density = mass ÷ volume · Pressure = force ÷ area

Shape

- Rectangle bh · Triangle $\frac{1}{2}bh$ · Trapezium $\frac{1}{2}(a + b)h$ · Circle πr^2, circumference πd
- Prism volume = cross-section area × length
- Sector = (angle ÷ 360) × πr^2 · Arc = (angle ÷ 360) × πd
- Similar shapes: length factor k, area factor k^2, volume factor k^3

Triangles

- Pythagoras: $a^2 + b^2 = c^2$ (c is the longest side)
- SOH CAH TOA: sin = O/H, cos = A/H, tan = O/A
- Higher: $a/\sin A = b/\sin B$ · $a^2 = b^2 + c^2 - 2bc \cos A$ · Area = $\frac{1}{2}ab \sin C$

Statistics

- Mean from a table: total of (value × frequency) ÷ total frequency
- Grouped data: use the midpoint of each group
- Pie chart angle = frequency ÷ total × 360°
- IQR = upper quartile − lower quartile
- Higher: frequency density = frequency ÷ class width

Calculator

- Use brackets and the fraction key; store answers with Ans instead of retyping
- Never round in the middle of a question: round once, at the end
- Check the calculator is in degrees (D on the screen) for trigonometry

Your exam paper has its own formula list on the inside cover. Learn everything above anyway: knowing it saves time.

The 25 mistakes that cost the most marks

Each one comes with an exam-style question and its full mark scheme, so you can see exactly which mark the mistake loses.

1. Taking a percentage off the new price

Undoing a percentage change by taking the same percentage off the new amount. A 20% rise is undone by ÷ 1.2, not by taking 20% off.

Example [3 marks]: After a discount of 60%, a phone is £102.00. How much was it originally?

- **B1** Recognises £102.00 is 40% of the original (multiplier 0.4)
- **M1** Divides by their multiplier: £102.00 ÷ 0.4 (or ÷ 40 × 100)
- **A1** £255.00

2. Finding 10% the long way, then slipping

For 10%, divide by 10. Then build: 5% is half of that, 15% is 10% + 5%.

Example [2 marks]: Work out 25% of £130.

- **M1** £130 × 0.25 (or find 10%, 5%, 1% and build up)
- **A1** £32.50

3. Paying the discount instead of the price

1/6 off means you pay 5/6. Read whether the question wants the saving or what you pay.

Example [1 mark]: Work out 1/10 of 370 people.

- **B1** 370 ÷ 10 × 1 = 37 people

4. Leaving out VAT, or using the wrong rate

Read the rate given, add it on, and keep the pence in money answers.

Example [2 marks]: A games console costs £580 before VAT. VAT is charged at 20%. Work out the price of the games console including VAT.

- **M1** £580 × 1.2, or £580 + 20% of £580
- **A1** £696.00

5. Adding a charge too many times

A booking fee per order is added once; a fee per person is multiplied. Underline which it is.

Example [3 marks]: An electricity supplier charges a standing charge of 55p per day, plus 29p for each unit (kWh) used. The Thomas family use 1,100 units for one quarter (91 days). Work out their bill.

- **M1** 91 × 55p = £50.05
- **M1** 1100 × 29p = £319.00
- **A1** £369.05

6. Getting units mixed up

Change everything into the same unit before you calculate. 206 cm is 2.06 m, not 2.6 m.

Example [1 mark]: Change 608 ml into l.

B1 ÷ 1000 = 0.608 l

7. Using perimeter when it asks for area

Area is the space inside, in square units. Adding the lengths gives the perimeter.

Example [2 marks]: Work out the area of this trapezium.

M1 ½ × (a + b) × h
A1 84 cm²

8. Splitting a compound shape, then forgetting a bit

Split into rectangles and triangles, label each area, then add them. Triangles need the ½.

Example [3 marks]: Work out the area of this shape. All corners are right angles.

M1 16 × 8 − 6 × 3 (or two rectangles)
M1 Missing lengths 6 cm and 3 cm
A1 110 cm²

9. Using πr² for a sector

A sector is a fraction of the circle: (angle ÷ 360) × πr².

Example [3 marks]: The diagram shows a sector of a circle with radius 11 cm and angle 90°. Work out the area of the sector. Give your answer to 1 decimal place.

M1 90/360
M1 π × 11²
A1 95.0 cm²

10. Surface area from one face

A cuboid has 6 faces in 3 matching pairs. Find all three, double, add.

Example [2 marks]: Work out the total surface area of this cuboid.

M1 72, 32 and 36 cm², two of each
A1 280 cm²

11. Mean from a table: dividing by the number of rows

Multiply each value by its frequency, add them, then divide by the total frequency.

Example [3 marks]: The table shows goals for a group of 23 students. Work out the mean.

GOALS SCORED	FREQUENCY
3	2
4	9
5	1
6	9
7	2

M1 Multiplies each value by its frequency: 3×2 + 4×9 + 5×1 + 6×9 + 7×2
M1 115 ÷ 23
A1 5

12. Pie charts: dividing by the wrong total

Angle = frequency ÷ the total of ALL frequencies × 360°.

Example [2 marks]: 120 students were asked their favourite sport. You are drawing a pie chart. Work out the angle for Rugby.

SPORT	FOOTBALL	NETBALL	SWIMMING	RUGBY
Frequency	22	34	29	35

M1 360 ÷ 120 = 3° per student
A1 35 × 3 = 105°

13. Bearings without three figures

A bearing always has 3 figures, measured clockwise from north: 045°, not 45°.

Example [2 marks]: The bearing of B from A is 225°. Work out the bearing of A from B.

M1 225 − 180
A1 045°

14. Density the wrong way up

Density = mass ÷ volume. Check your answer makes sense: wood is less dense than metal.

Example [2 marks]: A block of ice has a mass of 135 g. The density of ice is 0.9 g/cm³. Find its volume.

M1 volume = mass ÷ density
A1 135 ÷ 0.9 = 150 cm³

15. Pythagoras answer used as an area

Pythagoras gives a LENGTH. If the question wants an area, you still have another step.

Example [3 marks]: Work out the length x. Give your answer to 1 decimal place.

M1 $10^2 + 11^2 = 221$
M1 $\sqrt{221}$
A1 14.9 cm

16. Choosing the wrong trig ratio

Label O, A and H from the angle you're using, then pick the ratio with the two sides you have.

Example [3 marks]: Work out the length x. Give your answer to 1 decimal place.

M1 Uses sin
M1 $x = 23 \times \sin 52°$
A1 18.1 cm

17. Rounding halfway through

Keep every digit on your calculator (use Ans) and round once, at the very end.

Example [3 marks]: Rhys stands 45 m from the foot of a tower, on level ground. The angle of elevation of the top of the tower is 49°. Work out the height of the tower. Give your answer to 1 decimal place.

M1 $\tan 49° = h/45$
M1 $h = 45 \times \tan 49°$
A1 51.8 m

18. Standard form division upside down

Divide the numbers and subtract the powers, in the order the question gives them.

Example [2 marks]: Work out $(7 \times 10^{-3}) \div (2 \times 10^{-4})$. Give your answer in standard form.

B1 3.5×10^1
B1 3.5×10^1

19. Similar shapes: assuming, or using the wrong factor

Find the length scale factor from matching sides. Areas use k^2, volumes k^3.

Example [2 marks]: Triangles A and B are similar. Work out the length x.

M1 $36 \div 9 = 4$
A1 $4 \times 4 = 16$ cm

20. Ratio: dividing by one side

Add the parts first. Total ÷ total parts = one part.

Example [2 marks]: Ibrahim and Aisha share £72 in the ratio 5 : 3. How much does each person get?

M1 8 parts, so one part = £72 ÷ 8 = £9
A1 Ibrahim £45, Aisha £27

21. Inverse proportion done as direct

More workers, less time. Find the total work (workers × days), then divide.

Example [2 marks]: It takes 9 builders 8 days to build a wall. How long would it take 12 builders, working at the same rate?

M1 9 × 8 = 72 builder-days
A1 72 ÷ 12 = 6 days

22. Travel graphs: misreading the scale

Count what one small square is worth before reading any value off a graph.

Example [2 marks]: The graph shows Rhys's bike ride. Work out the average speed on the journey back home, in km/h.

M1 20 km in 60 minutes
A1 20 ÷ 1 = 20 km/h

23. Bounds: using the wrong ends (Higher)

For the smallest difference, take the lower bound of the first minus the UPPER bound of the second.

Example [2 marks]: A piece of wood is 67 cm long, to the nearest cm. A 29 cm piece is cut off, also measured to the nearest cm. Work out the upper bound of the length that is left.

M1 Biggest minus smallest: 67.5 − 28.5
A1 39 cm

24. AER: using the nominal rate (Higher)

Compounding quarterly means 4 periods a year, each at a quarter of the yearly rate.

Example [3 marks]: An investment grows by 2% each year (compound interest). After 2 years it is worth £7282.80. Work out the amount first invested.

B1 Multiplier for 2 years: $1.02^2 = 1.0404$
M1 Divides by their multiplier: £7282.80 ÷ 1.0404
A1 £7000.00

25. Stratified sampling: scaling the wrong number (Higher)

Sample for a group = group size ÷ population × total sample. Round sensibly, then check the total.

Example [2 marks]: A school has 820 students: 120 in Year 7, 180 in Year 8, 200 in Year 9, 160 in Year 10, 160 in Year 11. A stratified sample of 40 students is taken. How many students from Year 7 should be in the sample?

M1 120/820 × 40
A1 6

TamzMaths practice paper

GCSE Mathematics – Numeracy

Unit 1: Non-calculator

Intermediate tier

1 hour 45 minutes · 80 marks

- Answer all the questions in the spaces provided.
- Show your working: method marks are given even if your final answer is wrong.
- You may not use a calculator. Take π as 3.14.
- Diagrams are not drawn to scale unless the question says so.
- You will also need a ruler, a protractor and a pair of compasses.
- Practice paper I1. Written by TamzMaths in the style of the WJEC papers. Not an official WJEC paper.

1 Aisha got 7 out of 25 pupils in a class who walk to school. What percentage is that? **[2]**

Percentage ..... %

2 The bearing of B from A is 055°. Work out the bearing of A from B. **[2]**

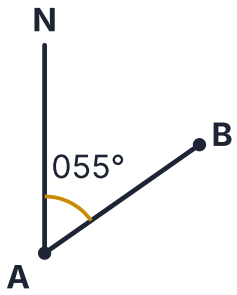

Not drawn accurately

Bearing ..... °

3 A pair of trainers costs £130. The price goes up by 15%. Work out the new price. **[2]**

4 5 numbers have a mean of 5. 4 of the numbers are 5, 6, 0, 7. What is the other number? **[2]**

The missing number .....

5 A map has a scale of 1 : 20,000. Two villages are 12.5 cm apart on the map. What is the real distance between them in kilometres? **[2]**

Real distance ..... km

6 A coach travels at an average speed of 50 km/h for 2 hours 30 minutes. How far does it travel? **[2]**

Answer ..... km

7 Tom and Mali share £583 in the ratio 5 : 6. How much does each person get? **[2]**

Mali £ .....

8 Work out the area of this trapezium. **[2]**

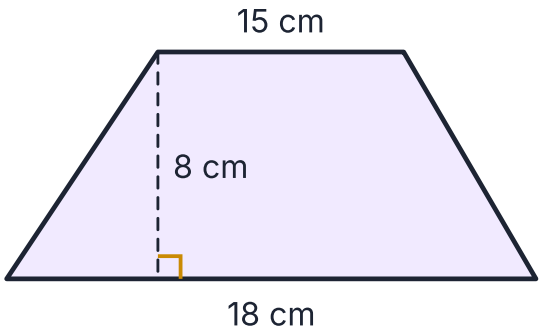

Not drawn accurately

Area ..... cm²

9 The chart shows approximate road distances in miles. Dylan drives from Merthyr Tydfil to Swansea, then from Swansea to Bridgend. How far is that altogether? **[2]**

	CARDIFF	SWANSEA	BRIDGEND
SWANSEA	41		
BRIDGEND	20	22	
MERTHYR TYDFIL	24	31	27

Total distance ..... miles

10 Aisha sells cars. Each month Aisha is paid £1600 plus 4% commission on the value of the cars sold. In March, Aisha sells cars worth £12,000. Work out Aisha's total pay for March. **[3]**

Total pay for March £ .....

11 Osian walks part of the Wales Coast Path over three days. The table shows the start and finish times. Work out the total walking time. Give your answer in hours and minutes. **[3]**

	START	FINISH
DAY 1	09:45	16:20
DAY 2	12:05	16:15
DAY 3	11:15	16:25

Total time .....

12 Rhys tests a biased coin 80 times. It lands on heads 42 times. (a) Estimate the probability that it lands on heads. (b) Estimate how many times it lands on heads in 400 goes. **[3]**

(b) Estimated number of times .....

13 A shop sells yoghurts in two packs. Pack A: 3 for £2.85. Pack B: 8 for £6.00. Which pack is better value? Show your working. **[3]**

Which is better value?: tick one

☐ Pack A ☐ Pack B

14 The probability that a biased coin lands on heads is 1/50. The coin is flipped 200 times. How many times would you expect it to land on heads? **[2]**

Expected number of heads .....

15 72 students were asked their favourite sport. You are drawing a pie chart. Work out the angle for Netball. **[2]**

SPORT	FOOTBALL	NETBALL	SWIMMING	RUGBY
FREQUENCY	24	19	20	9

Angle for Netball ..... °

16 The cumulative frequency graph shows the times taken by 90 people to finish a puzzle. Use it to estimate the interquartile range. **[2]**

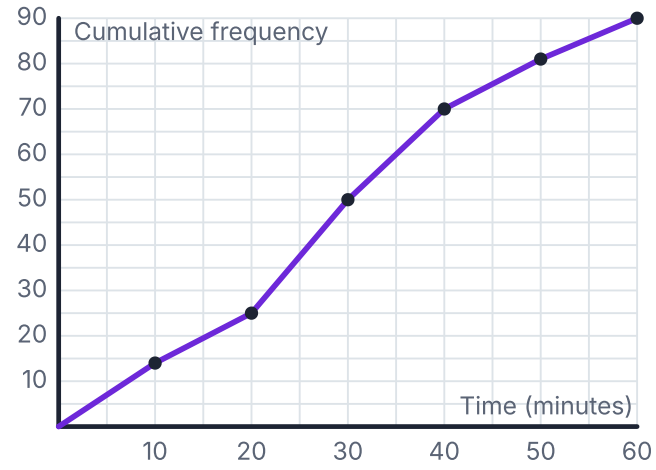

Interquartile range ..... minutes

17 The graph shows Osian's bike ride. Work out the average speed on the journey back home, in km/h. **[2]**

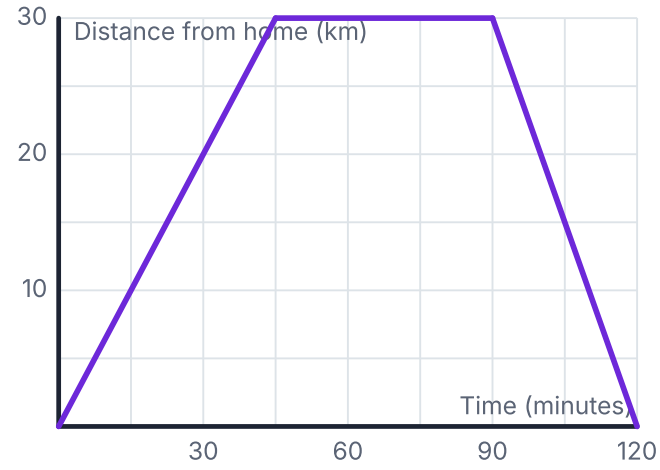

Speed ..... km/h

18 From a lighthouse A, ship B is on a bearing of 090° and ship C is on a bearing of 240°. Work out the size of angle BAC. **[2]**

Angle BAC ..... °

19 Here are the marks of 11 students in a quiz: 21, 24, 16, 17, 12, 20, 28, 25, 13, 8, 9. Work out the interquartile range. **[2]**

Interquartile range .....

20 Rearrange $y = (x + 11)/5$ to make x the subject. **[2]**

Final answer x = ...

21 Work out $(5 \times 10^6) \times (3 \times 10^2)$. Give your answer in standard form. **[2]**

Answer in standard form .....

22 A block of gold has a mass of 2895 g. The density of gold is 19.3 g/cm^3. Find its volume. **[2]**

Answer ..... cm^3

23 A sample of 8 people is chosen from the first 240 people in a queue, using systematic sampling. The first person chosen is the 4th person. Write down the positions of all 8 people in the sample. **[2]**

Positions .....

24 A county has a population of 45,000 and an area of 30 km². Work out its population density. **[2]**

Population density ..... people per km²

25 One train leaves the station every 14 minutes. Another train leaves every 16 minutes. Both trains leave together at 10:00 am. When is the next time they leave together? **[2]**

Time .....

26 Tomos comes home from holiday with €649.60. The exchange rate is £1 = €1.16. How much is this in pounds? **[2]**

Final answer £ .....

27 The Hughes family borrow £180,000 on a mortgage. They pay £900 every month for 20 years. How much more do they pay back than they borrowed? **[3]**

Extra paid (interest) £ .....

28 Given that y is inversely proportional to x: when x = 6, y = 60. Find y when x = 2. **[3]**

Answer y = ...

29 Ffion earns £30,400 a year. Use these rates: no tax on the first £12,570 (the personal allowance), then 20% income tax on the rest. How much income tax does Ffion pay in a year? **[3]**

Final answer: income tax for the year £ .....

30 The angles of a triangle are 5x − 22, 5x − 32 and 3x − 13, all in degrees. Find the size of the largest angle. **[3]**

Final answer: the largest angle ..... °

31 Work out 3 2/5 × 1 5/6. Give your answer as a mixed number in its simplest form. **[3]**

Answer (mixed number) .....

32 An electricity supplier charges a standing charge of 55p per day, plus 27p for each unit (kWh) used. The Jones family use 1,200 units for one quarter (91 days). Work out their bill. **[3]**

Final answer: total bill £ .....

33 Mali and Cerys share some money in the ratio 5 : 8. Cerys gets £30 more than Mali. How much money did they share altogether? **[3]**

Total shared £ .....

34 After a discount of 30%, a laptop is £213.50. How much was it originally? **[3]**

END OF PAPER

TamzMaths practice paper

GCSE Mathematics – Numeracy

Unit 2: Calculator-allowed

Intermediate tier

1 hour 45 minutes · 80 marks

- Answer all the questions in the spaces provided.
- Show your working: method marks are given even if your final answer is wrong.
- You will need a calculator. Take π as 3.14 or use the π button.
- Diagrams are not drawn to scale unless the question says so.
- You will also need a ruler, a protractor and a pair of compasses.
- Practice paper I2. Written by TamzMaths in the style of the WJEC papers. Not an official WJEC paper.

1 A circle has a diameter of 40 cm. Work out its area. Give your answer to 1 decimal place. **[2]**

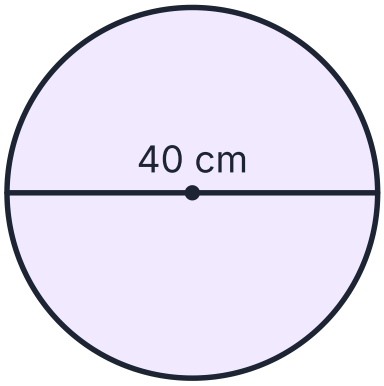

Not drawn accurately

Area ..... cm²

2 A set of speakers costs £410 before VAT. VAT is charged at 20%. Work out the price of the set of speakers including VAT. **[2]**

Final answer £ .....

3 A shop takes 75% off a £110 pair of trainers. How much does it cost now? **[2]**

4 Here is part of Dylan's bank statement. Work out the end balance. **[2]**

	MONEY IN	MONEY OUT	BALANCE
START BALANCE			£425.00
WAGES	£1000.00		
RENT		£600.00	
SOLD BIKE ONLINE	£135.00		
COUNCIL TAX		£111.05	
END BALANCE			?

End balance £ .....

5 A recipe for 4 people uses 180 g of flour. How much flour is needed for 9 people? **[2]**

For 9 people ..... g

6 Find the nth term of the sequence 0, 4, 8, 12, 16, ... **[2]**

nth term .....

7 A hoodie costs £40. Ffion pays a 10% deposit. How much is the deposit? **[2]**

8 Seren earns £13.10 an hour in a part-time job. How much does Seren earn for 21 hours of work? **[2]**

Final answer £ .....

9 Tomos buys a guitar for £260.00 and sells it for £286.00. Work out Tomos's percentage profit. **[2]**

Final answer: percentage profit ..... %

10 Gethin drives 220 miles. The car does 55 miles per gallon (mpg). Petrol costs 139p per litre, and 1 gallon is about 4.5 litres. Work out the cost of the petrol for the journey. **[3]**

Cost of the petrol £ .....

11 It takes 6 builders 11 days to build a wall. How long would it take 3 builders, working at the same rate? **[2]**

Days ..... days

12 A number is picked at random from the whole numbers 1 to 15. A = multiples of 4, B = multiples of 6. Draw a Venn diagram to help, then find the probability that the number is in both A and B. **[2]**

Probability .....

13 Two fair six-sided dice are rolled. Work out the probability that the total is 9. **[2]**

Probability .....

14 The scatter graph shows some data and a line of best fit. Use the line of best fit to estimate the value of y when x = 5. **[2]**

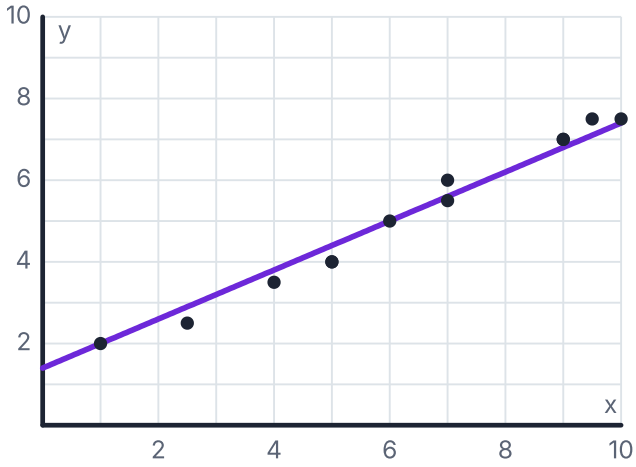

Estimate of y .....

15 By rounding each number to 1 significant figure, estimate the value of (816.9 × 5.30) ÷ 0.140. **[2]**

Estimate .....

16 Triangles A and B are similar. Work out the length x. **[2]**

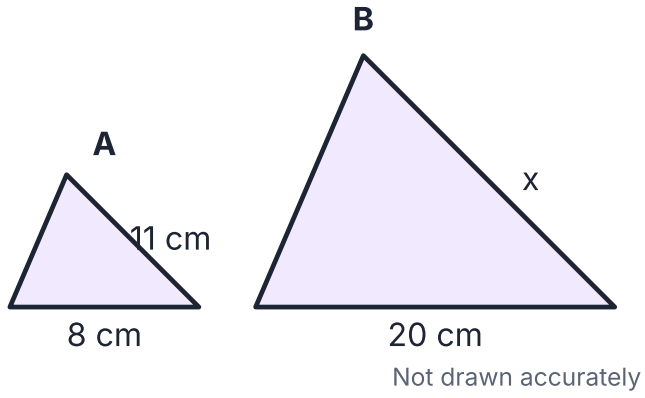

Not drawn accurately

x ..... **cm**

17 A flight leaves Cardiff at 11:00 UK time. The flight takes 8 hours 50 minutes. Dubai is 4 hours ahead of the UK. What is the local time in Dubai when the plane lands? Use the 24-hour clock. **[2]**

Local time .....

18 Three friends race. Only one person can win. The probability that Ffion wins is 0.21 and the probability that Osian wins is 0.24. Work out the probability that Ffion or Osian wins. **[2]**

Probability .....

19 Work out the total surface area of this cuboid. **[2]**

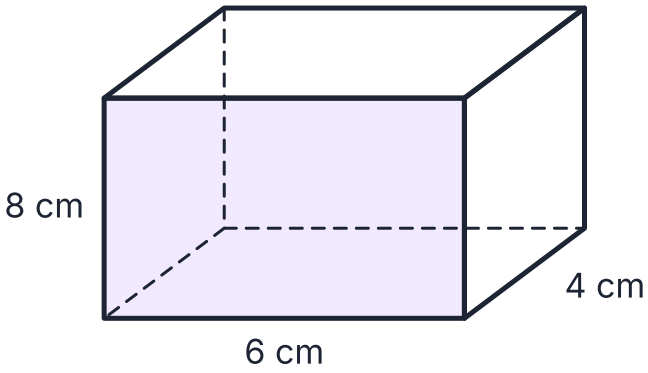

Surface area ..... cm²

20 Work out the volume of this cylinder. Give your answer to 1 decimal place. **[2]**

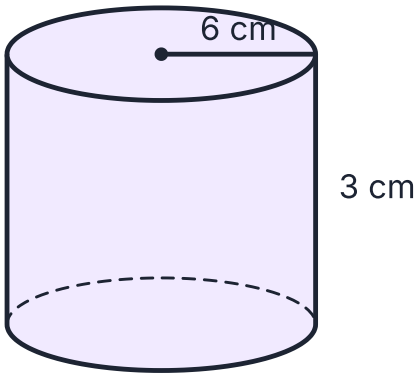

Not drawn accurately

Volume ..... cm³

21 The table gives the median and range of the test scores for Year 10 and Year 11. Make two comparisons: one about the average and one about the spread. **[2]**

	MEDIAN	RANGE
YEAR 10	66	8
YEAR 11	59	17

(b) Comparing the spread: tick one

☐ Year 10's results were more consistent, because their range is smaller

☐ Both were equally consistent

☐ Year 11's results were more consistent, because their median is higher

☐ Year 11's results were more consistent, because their range is bigger

22 Here is part of a monthly payslip. Work out the net pay (take-home pay). **[2]**

	AMOUNT
GROSS PAY	£2800.00
INCOME TAX	£350.46
NATIONAL INSURANCE	£168.00
PENSION	£140.00

Net pay £ .....

23 Work out $\sqrt{(4.8 + 5.3^2)} \div (1.7 \times 3.2)$ on your calculator. Write the full display, then round to 3 significant figures. **[2]**

Answer to 3 significant figures .....

24 The table shows the time, t minutes, that 36 people waited. Work out an estimate for the mean waiting time. Give your answer to 2 decimal places if needed. **[3]**

TIME (T MINUTES)	FREQUENCY
$0 < t \leq 20$	5
$20 < t \leq 40$	13
$40 < t \leq 60$	6
$60 < t \leq 80$	12

Estimated mean ..... minutes

25 Work out the area of this shape. All corners are right angles. **[3]**

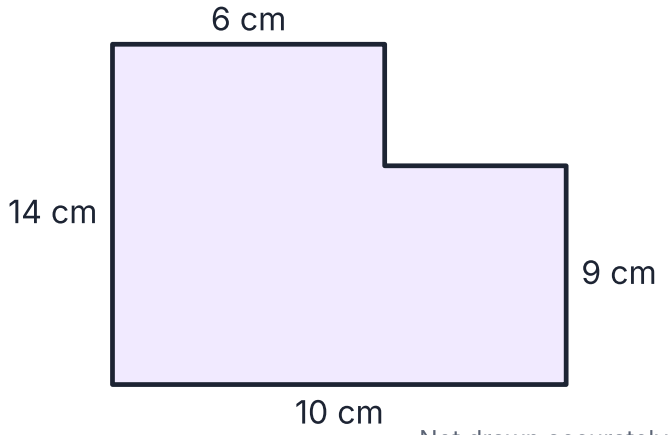

Not drawn accurately

Area ..... cm²

26 Rhys stands 35 m from the foot of a tower, on level ground. The angle of elevation of the top of the tower is 52°. Work out the height of the tower. Give your answer to 1 decimal place. **[3]**

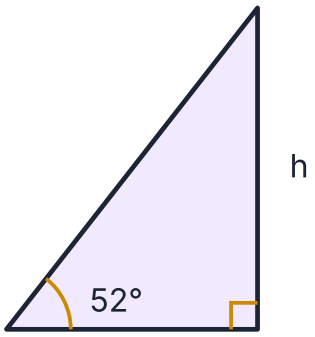

Not drawn accurately

Height ..... m

27 The table shows siblings for a group of 25 students. Work out the mean. **[3]**

NUMBER OF SIBLINGS	FREQUENCY
1	6
2	2
3	2
4	6
5	4
6	5

Mean .....

28 The probability that it rains in Aberystwyth on Saturday is 0.2. The probability that it rains on Sunday is 0.6. The two days are independent. Work out the probability that it rains on exactly one of the days. **[3]**

Probability .....

29 The diagram shows a sector of a circle with radius 11 cm and angle 270°. Work out the area of the sector. Give your answer to 1 decimal place. **[3]**

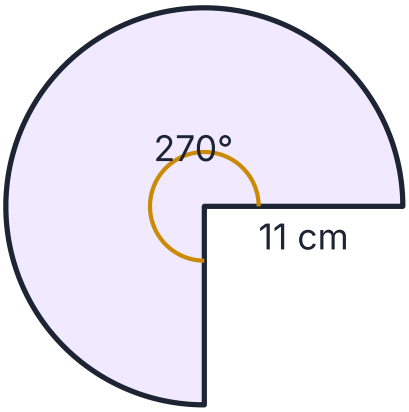

Not drawn accurately

Area ..... **cm²**

30 Work out the length x. Give your answer to 1 decimal place. **[3]**

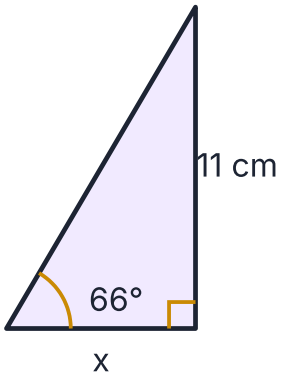

Not drawn accurately

x ..... **cm**

31 A planter is a prism 180 cm long. Its cross-section is the trapezium shown. How many litres of compost does it take to fill it? (1 litre = 1000 cm^3.) **[3]**

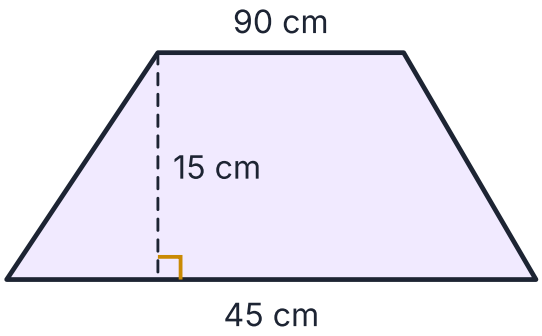

Not drawn accurately

Volume ..... **litres**

32 Work out the length x. Give your answer to 1 decimal place. **[3]**

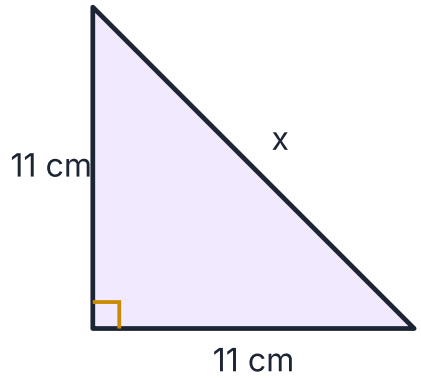

Not drawn accurately

x ..... **cm**

33 Osian takes home £1400 a month. His monthly budget is shown. What percentage of his take-home pay is left for savings? Give your answer to 1 decimal place. **[3]**

ITEM	COST PER MONTH
RENT	£650
BILLS	£150
FOOD	£210
TRAVEL	£72
PHONE	£25

Percentage left ..... **%**

34 Work out the size of angle x. Give your answer to 1 decimal place. **[3]**

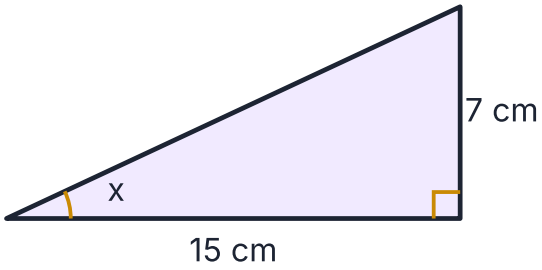

Not drawn accurately

x ..... °

END OF PAPER

TamzMaths practice paper

GCSE Mathematics – Numeracy

Unit 1: Non-calculator

Higher tier

1 hour 45 minutes · 80 marks

- Answer all the questions in the spaces provided.
- Show your working: method marks are given even if your final answer is wrong.
- You may not use a calculator. Take π as 3.14.
- Diagrams are not drawn to scale unless the question says so.
- You will also need a ruler, a protractor and a pair of compasses.
- Practice paper H1. Written by TamzMaths in the style of the WJEC papers. Not an official WJEC paper.

1 By rounding each number to 1 significant figure, estimate the value of (4.710 × 40.9) ÷ 8.19. **[2]**

Estimate .....

2 Make x the subject of y = 2(x + 1). **[2]**

Final answer x = ...

3 Here is part of a monthly payslip. Work out the net pay (take-home pay). **[2]**

	AMOUNT
GROSS PAY	£2350.00
INCOME TAX	£294.22
NATIONAL INSURANCE	£141.00
PENSION	£117.50

Net pay £ .....

4 The exchange rate is £1 = $1.26. Osian changes £100 into dollars. How many dollars does Osian get? **[2]**

Final answer $ .....

5 A map has a scale of 1 : 25,000. Two places are 6 km apart in real life. How far apart are they on the map, in centimetres? **[2]**

On the map ..... cm

6 The scatter graph shows some data and a line of best fit. Use the line of best fit to estimate the value of y when x = 2.5. **[2]**

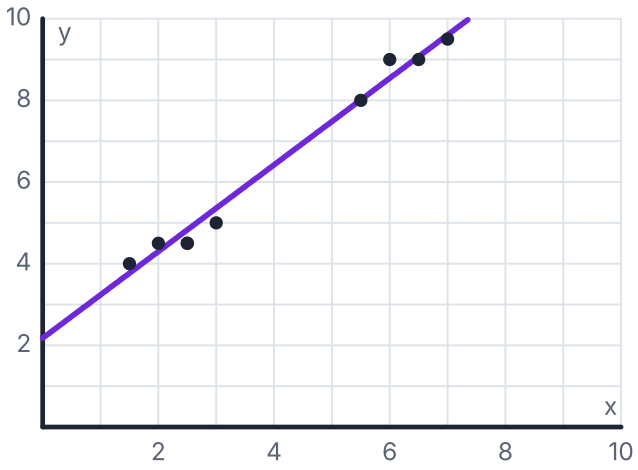

Estimate of y .....

7 Two fair six-sided dice are rolled. Work out the probability that the total is more than 7. **[2]**

Probability .....

8 Three friends race. Only one person can win. The probability that Ffion wins is 0.17 and the probability that Osian wins is 0.38. Work out the probability that Ffion or Osian wins. **[2]**

Probability .....

9 The cumulative frequency graph shows the times taken by 77 people to finish a puzzle. Use it to estimate the median time. **[2]**

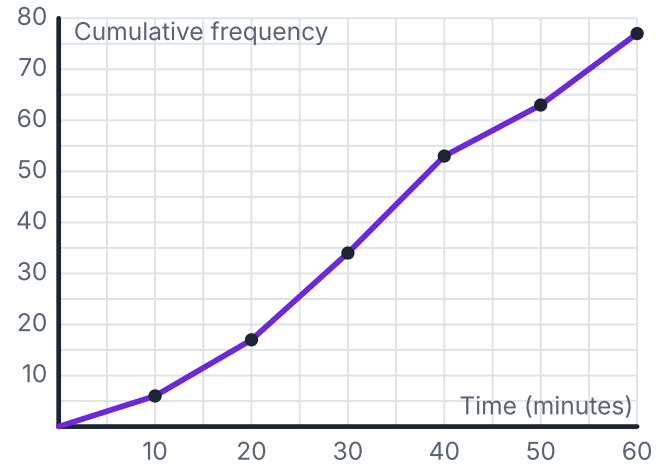

Median ..... minutes

10 The Hughes family borrow £100,000 on a mortgage. They pay £600 every month for 20 years. How much more do they pay back than they borrowed? **[3]**

Extra paid (interest) £ .....

11 The table shows the time, t minutes, that 41 people waited. Work out an estimate for the mean waiting time. Give your answer to 2 decimal places if needed. **[3]**

TIME (T MINUTES)	FREQUENCY
$0 < t \leq 10$	7
$10 < t \leq 20$	13
$20 < t \leq 30$	10
$30 < t \leq 40$	11

Estimated mean ..... minutes

12 Megan and Mali share some money in the ratio 1 : 6. Mali gets £30 more than Megan. How much money did they share altogether? **[3]**

Total shared £ .....

13 The table shows goals for a group of 20 students. Work out the mean. **[3]**

GOALS SCORED	FREQUENCY
2	9
3	1
4	3
5	7

Mean .....

14 Rhys is paid £14.40 an hour for a basic week of 38 hours. Any extra hours are overtime, paid at time and a half. Last week Rhys worked 42 hours. Work out Rhys's pay for the week. **[3]**

Final answer: total pay £ .....

15 After a discount of 25%, a games console is £228.75. How much was it originally? **[3]**

16 You are comparing two loans. Which rate includes the interest and the fees, so you can compare the total cost? **[1]**

Answer: tick one

☐ The inflation rate ☐ AER ☐ APR ☐ The base rate

17 Two shapes are similar. The lengths of the larger shape are 5 times the lengths of the smaller shape. The smaller shape has an area of 35 cm^2. Work out the area of the larger shape. **[2]**

Area ..... cm^2

18 The pressure on an area of 8 m^2 is 15 N/m^2. Work out the force, to the nearest newton. **[2]**

Force ..... N

19 Work out $(2.9 \times 10^5) + (7.6 \times 10^4)$. Give your answer in standard form. **[2]**

Answer in standard form .....

20 Simplify $\sqrt{180} + \sqrt{20}$. Give your answer in the form $a\sqrt{b}$. **[2]**

Answer .....

21 A school has 800 students: 120 in Year 7, 180 in Year 8, 190 in Year 9, 110 in Year 10, 200 in Year 11. A stratified sample of 50 students is taken. How many students from Year 8 should be in the sample? **[2]**

Number of students .....

22 For a histogram, work out the frequency density for the group $20 < x \leq 30$. **[2]**

X	FREQUENCY
$0 < x \leq 20$	64
$20 < x \leq 30$	28
$30 < x \leq 50$	12
$50 < x \leq 100$	170

Frequency density .....

23 The graph shows the distance travelled by a ball rolling down a slope. A tangent has been drawn to the curve at t = 2, through the two points marked. Use it to estimate the speed of the ball at t = 2 seconds. **[2]**

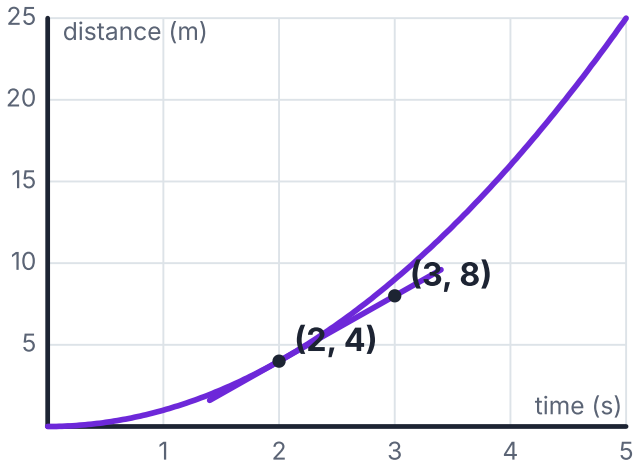

Speed ..... m/s

24 Write the recurring decimal 0.505050... as a fraction in its simplest form. **[2]**

Answer .....

25 Two solids are similar. The height of the larger solid is 3 times the height of the smaller one. The smaller solid has a volume of 15 cm^3. Work out the volume of the larger solid. **[2]**

Volume ..... cm^3

26 Class A has 18 students with a mean test score of 70. Class B has 22 students with a mean score of 68. Work out the mean score of all 40 students together. **[3]**

Mean of everyone .....

27 The table shows the speed of a cyclist at equal time intervals. Use the trapezium rule with 4 strips to estimate the distance travelled from t = 0 to t = 8 seconds. **[3]**

TIME, T (S)	0	2	4	6	8
SPEED, V (M/S)	5	10	6	11	16

Distance ..... **m**

28 A bag has 3 red and 6 blue sweets. Zain takes two sweets at random, without putting the first one back. Work out the probability that both are red. **[3]**

Probability .....

29 The velocity-time graph shows a cyclist's journey. Work out the total distance travelled. **[3]**

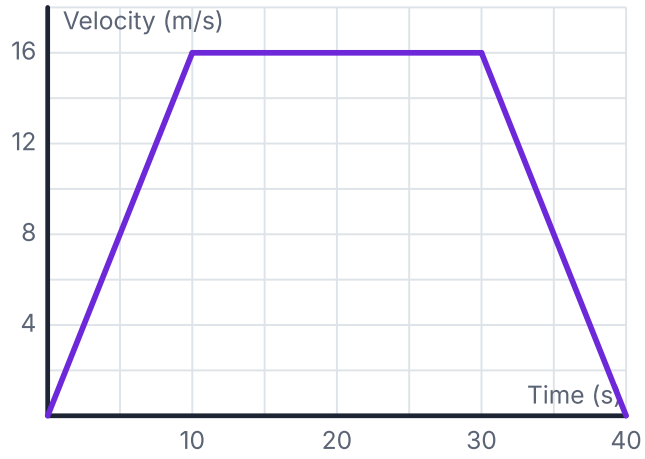

Distance ..... **m**

30 The probability that Tom will score on any penalty is 3/10. Each penalty is independent. Work out the probability that Tom will score at least once in 2 goes. **[3]**

Probability .....

31 Two similar photo frames have areas of 36 cm² and 225 cm². The smaller frame is 2 cm wide. How wide is the larger frame? **[3]**

Width ..... **cm**

32 y is directly proportional to the square root of x. When x = 4, y = 6. Find y when x = 9. **[3]**

Answer y = ...

33 Seren earns £27,800 a year. Use these rates: income tax is 20% of everything above £12,570; National Insurance is 8% of everything above £12,570. Work out Seren's take-home pay for the year. **[4]**

Final answer: take-home pay £ .....

END OF PAPER

TamzMaths practice paper

GCSE Mathematics – Numeracy

Unit 2: Calculator-allowed

Higher tier

1 hour 45 minutes · 80 marks

- Answer all the questions in the spaces provided.
- Show your working: method marks are given even if your final answer is wrong.
- You will need a calculator. Take π as 3.14 or use the π button.
- Diagrams are not drawn to scale unless the question says so.
- You will also need a ruler, a protractor and a pair of compasses.
- Practice paper H2. Written by TamzMaths in the style of the WJEC papers. Not an official WJEC paper.

1 The probability that a biased coin lands on heads is 3/25. The coin is flipped 100 times. How many times would you expect it to land on heads? **[2]**

Expected number of heads .....

2 From a lighthouse A, ship B is on a bearing of 080° and ship C is on a bearing of 270°. Work out the size of angle BAC. **[2]**

Angle BAC ..... °

3 A flight leaves Cardiff at 12:40 UK time. The flight takes 2 hours 35 minutes. Dubai is 4 hours ahead of the UK. What is the local time in Dubai when the plane lands? Use the 24-hour clock. **[2]**

Local time .....

4 One tram leaves the station every 15 minutes. Another tram leaves every 36 minutes. Both trams leave together at 10:00 am. When is the next time they leave together? **[2]**

Time .....

5 A number is picked at random from the whole numbers 1 to 20. A = multiples of 3, B = multiples of 7. Draw a Venn diagram to help, then find the probability that the number is in neither A nor B. **[2]**

Probability .....

6 Work out the volume of this cylinder. Give your answer to 1 decimal place. **[2]**

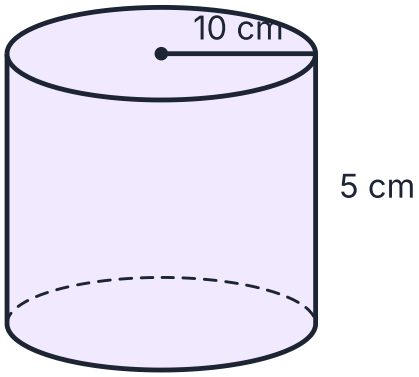

Not drawn accurately

Volume ..... cm³

7 Use your calculator to work out $\sqrt{(4.1 + 6.3^2)} \div (1.5 \times 3.2)$. Write down all the figures on your calculator display, then give your answer to 3 significant figures. **[2]**

Answer to 3 significant figures .....

8 It takes 5 builders 20 days to build a wall. How long would it take 4 builders, working at the same rate? **[2]**

Days ..... days

9 The graph shows Cerys's bike ride. Work out the average speed on the journey away from home, in km/h. **[2]**

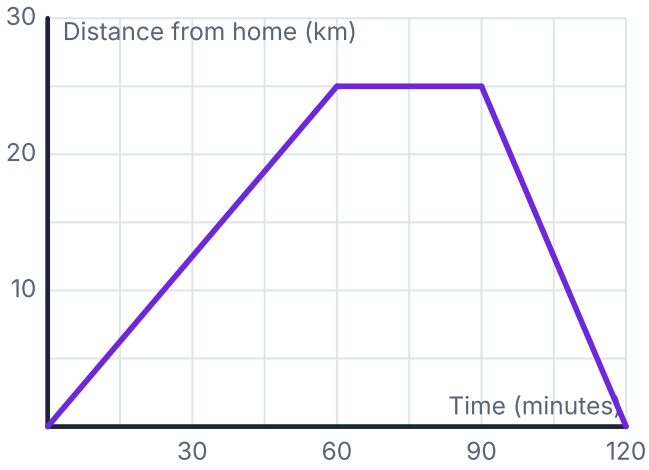

Speed ..... km/h

10 A rectangle is 25 cm long and 12 cm wide. Both are measured to the nearest centimetre. Work out the upper bound for the perimeter. **[2]**

The upper bound of the perimeter ..... cm

11 Triangles A and B are similar. Work out the length x. **[2]**

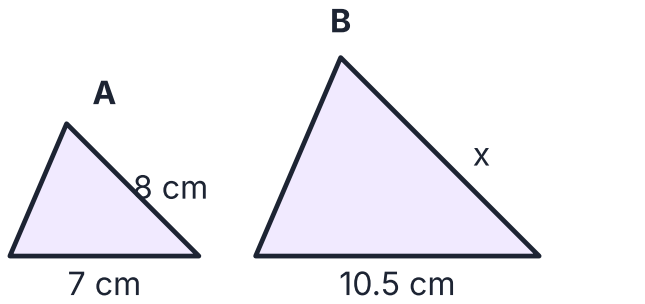

Not drawn accurately

x ..... **cm**

12 Gethin puts £7,750 in a savings account that pays 4.5% compound interest per year. Work out how much is in the account after 2 years. Give your answer to the nearest penny. **[3]**

Final answer: amount after 2 years £ .....

13 Rhys stands 35 m from the foot of a tower, on level ground. The angle of elevation of the top of the tower is 44°. Work out the height of the tower. Give your answer to 1 decimal place. **[3]**

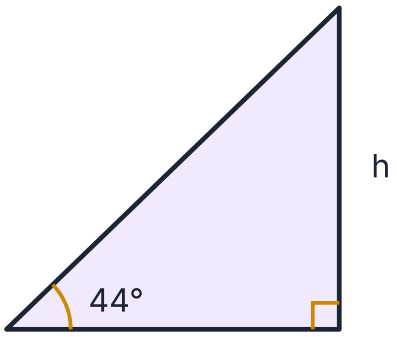

Not drawn accurately

Height ..... m

14 Osian takes home £2350 a month. His monthly budget is shown. What percentage of his take-home pay is left for savings? Give your answer to 1 decimal place. **[3]**

ITEM	COST PER MONTH
RENT	£575
BILLS	£90
FOOD	£250
TRAVEL	£48
PHONE	£15

Percentage left ..... %

15 Given that y is directly proportional to x^2: when x = 5, y = 150. Find y when x = 11. **[3]**

Answer y = ...

16 A cheetah runs at 26 m/s. Write this speed in km/h. **[2]**

Answer ..... km/h

17 A cone has base radius 5 cm and perpendicular height 7 cm. Work out its volume. (Volume of a cone = $\frac{1}{3}\pi r^2 h$.) Give your answer to 1 decimal place. **[2]**

Answer ..... cm^3

18 Work out the area of the triangle. Give your answer to 1 decimal place. **[2]**

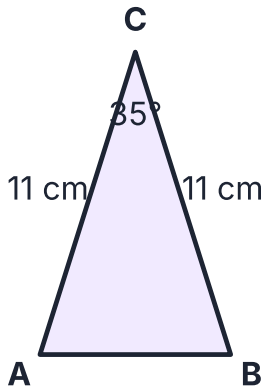

Not drawn accurately

Area ..... cm^2

19 The diagram shows a sector of a circle with radius 7 cm and angle 210°. Work out the length of the arc. Give your answer to 1 decimal place. **[2]**

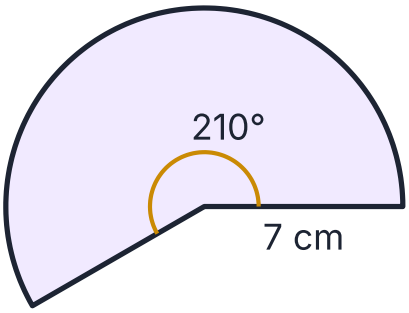

Not drawn accurately

Arc length ..... **cm**

20 Write √250 in the form a√b, where a and b are whole numbers and b is as small as possible. **[2]**

Answer .....

21 A piece of wood is 50 cm long, to the nearest cm. A 14 cm piece is cut off, also measured to the nearest cm. Work out the lower bound of the length that is left. **[2]**

The lower bound ..... **cm**

22 Osian bought a new caravan. Its value fell by 5% every year, and after 2 years it was worth £8303.00. How much did Osian pay for it? **[3]**

23 Work out the length x. Give your answer to 1 decimal place. **[3]**

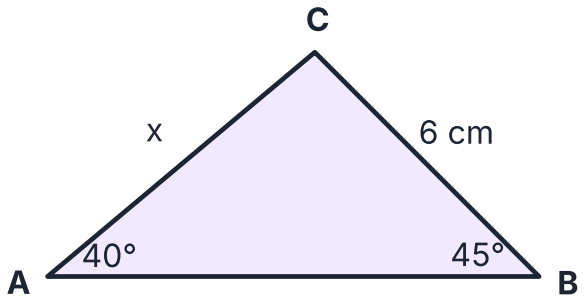

Not drawn accurately

x ..... **cm**

24 An investment grows by 3% each year (compound interest). After 2 years it is worth £6895.85. **[3]**
Work out the amount first invested.

25 Work out the length x. Give your answer to 1 decimal place. **[3]**

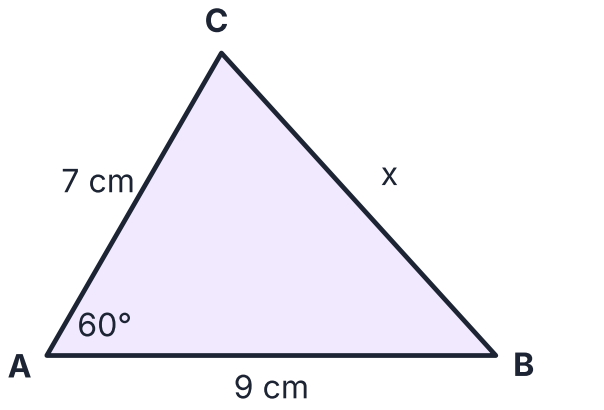

Not drawn accurately

x ..... cm

26 The price of a holiday was increased by 30%. Later, the new price was reduced by 5%. It now costs £963.30. Work out the original price. **[3]**

27 A runner covers 460 m, correct to the nearest 10 m, in 14.0 seconds, correct to 1 decimal place. Work out the lower bound for their average speed. Give your answer to 3 significant figures. **[3]**

The lower bound of the speed (3 s.f.) ..... m/s

28 A cylinder has a volume of 1570.8 cm^3 and a height of 5 cm. Work out its radius. Give your answer to 1 decimal place. **[3]**

Radius ..... cm

29 Work out the length of the longest diagonal of this cuboid (from a bottom corner to the opposite top corner). Give your answer to 1 decimal place. **[3]**

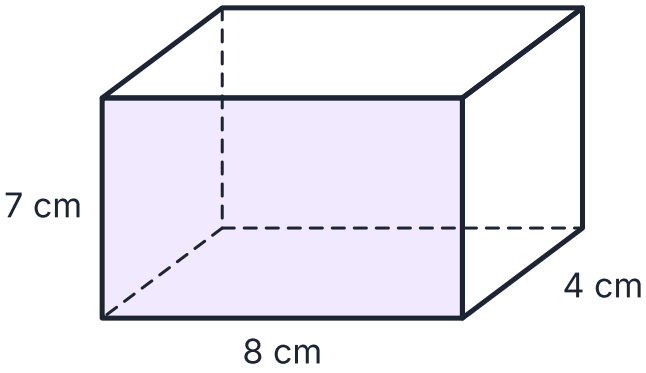

Longest diagonal ..... cm

30 Aisha has £8,500 to save for 4 years. Account A pays 4% simple interest per year. Account B pays 5% compound interest per year. Which account gives Aisha more money after 4 years? Show your working. **[3]**

Which account gives more?: tick one

☐ Account A ☐ Account B

31 Work out the size of angle x. Give your answer to 1 decimal place. **[3]**

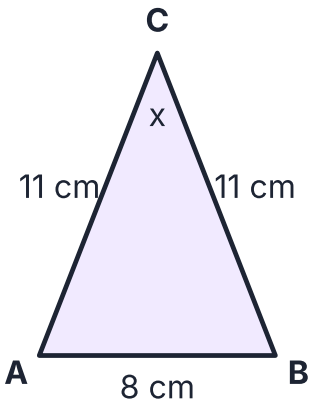

Not drawn accurately

x ..... °

32 The diagram shows a sector of a circle, radius 11 cm, angle 120°. The dashed chord cuts off a segment. Work out the area of the segment (the part between the chord and the arc). Give your answer to 1 decimal place. **[4]**

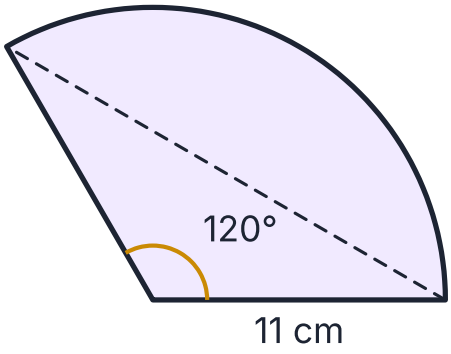

Not drawn accurately

Area of the segment ..... cm²

END OF PAPER

Mark scheme: Intermediate Unit 1 (non-calculator)

M = method mark, A = accuracy mark (needs the method), B = independent mark. Follow through (ft) marks may be given for using your own earlier answer correctly. Answers with π use the calculator's π button; answers using π = 3.14 also get the marks.

1. One amount as a percentage of another [2]

M1 7 ÷ 25 × 100
A1 28%

Common mistake: Dividing the wrong way round. The amount you are asked about goes on top.

2. Bearings [2]

M1 055 + 180
A1 235°

Common mistake: Forgetting three figures: write 005°, not 5°.

3. Percentage increase [2]

M1 £130 × 1.15 (or works out 15% and adds it on)
A1 £149.50

Common mistake: Working out the 5% and stopping there. The question wants the new amount.

4. Averages [2]

M1 5 × 5 = 25
A1 25 − 18 = 7

Common mistake: Averaging the numbers you know. Work with totals instead.

5. Map scales [2]

M1 12.5 × 20,000 = 250,000 cm
A1 ÷ 100 000 = 2.5 km

Common mistake: Forgetting to convert the cm into km.

6. Speed, distance, time [2]

M1 distance = speed × time
A1 50 × 2.5 = 125 km

Common mistake: Using 30 minutes as 0.3 hours. It is 0.5 hours.

7. Sharing in a ratio [2]

M1 11 parts, so one part = £583 ÷ 11 = £53
A1 Tom £265, Mali £318

Common mistake: Dividing by one side of the ratio instead of the total parts.

8. Area [2]

M1 ½ × (a + b) × h
A1 132 cm²

Common mistake: Using the sloping side instead of the perpendicular height.

9. Distance charts [2]

M1 31 and 22 miles
A1 53 miles

Common mistake: Reading the wrong row because the chart is a triangle. Follow both names to where they meet.

10. Commission [3]

- **M1** 4% of £12,000: 0.04 × 12,000
- **A1** £480
- **B1** £1600 + £480 = £2080

Common mistake: Taking the percentage of the basic pay instead of the sales.

11. Time [3]

- **M1** Day 1: 6 h 35 min, Day 2: 4 h 10 min, Day 3: 5 h 10 min
- **M1** 395 + 250 + 310 = 955 minutes
- **A1** 15 hours 55 minutes

Common mistake: Treating times as decimals. 1 hour 50 minutes is not 1.5 hours.

12. Relative frequency [3]

- **B1** 42/80 = 21/40
- **M1** 21/40 × 400
- **A1** 210

Common mistake: Dividing by the number of times it did not happen.

13. Best buy [3]

- **M1** Works out a price per yoghurt: £2.85 ÷ 3 = £0.95, or £6.00 ÷ 8 = £0.75
- **A1** Both correct: £0.95 and £0.75
- **A1** Pack B, with correct working

Common mistake: Just naming the deal without the working. Comparisons need both values.

14. Expected outcomes [2]

- **M1** 1/50 × 200
- **A1** 4

Common mistake: Dividing by the probability instead of multiplying.

15. Pie charts [2]

- **M1** 360 ÷ 72 = 5° per student
- **A1** 19 × 5 = 95°

Common mistake: Using 100 instead of 360.

16. Cumulative frequency [2]

- **M1** Reads at 22.5 and 67.5
- **A1** About 21 minutes

Common mistake: Reading across from the middle of the axis value, not half the total frequency.

17. Travel graphs [2]

- **M1** 30 km in 30 minutes
- **A1** 30 ÷ 0.5 = 60 km/h

Common mistake: Using minutes instead of hours for km/h.

18. Bearings [2]

- **M1** 240 − 090 = 150°
- **A1** 150°

Common mistake: Adding the bearings instead of finding the difference.

19. Interquartile range [2]

M1 In order: 8, 9, 12, 13, 16, 17, 20, 21, 24, 25, 28. Lower quartile = 3rd value = 12, upper quartile = 9th value = 24
A1 24 − 12 = 12

Common mistake: Giving the range (biggest − smallest).

20. Changing the subject [2]

M1 A correct first step, e.g. 5y = x + 11
A1 x = 5y − 11 (or any correct equivalent)

Common mistake: Doing the steps in the wrong order: undo + and − before × and ÷.

21. Standard form [2]

B1 15×10^8
B1 1.5×10^9

Common mistake: Leaving 20×10^8. Change it to 2×10^9.

22. Density [2]

M1 volume = mass ÷ density
A1 2895 ÷ 19.3 = 150 cm^3

Common mistake: Multiplying when you should divide. Use the formula triangle.

23. Systematic sampling [2]

B1 240 ÷ 8 = every 30th person
B1 4, 34, 64, 94, 124, 154, 184, 214

Common mistake: Starting at the gap instead of the given first position.

24. Population density [2]

M1 population ÷ area = 45,000 ÷ 30
A1 1500 people per km^2

Common mistake: Dividing the area by the population.

25. LCM in context [2]

M1 LCM of 14 and 16 = 112 minutes
A1 11:52 am

Common mistake: Giving the LCM in minutes when the question asks for the time of day.

26. Currency [2]

M1 €649.60 ÷ 1.16
A1 £560.00

Common mistake: Dividing when changing pounds to euros.

27. Mortgages [3]

M1 20 × 12 = 240 payments
M1 240 × £900 = £216,000
A1 £216,000 − £180,000 = £36,000

Common mistake: Forgetting to multiply the years by 12.

28. Proportion [3]

M1 $y = k/x$
A1 k = 360
A1 y = 180

Common mistake: Forgetting to square x (or cube, or root it) when you find k.

29. Income tax [3]

M1 £30,400 − £12,570 = £17,830
M1 20% of their taxable income: £17,830 × 0.2
A1 £3,566.00

Common mistake: Taxing the whole salary.

30. Forming an equation [3]

M1 (5x − 22) + (5x − 32) + (3x − 13) = 180
A1 x = 19
A1 73°

Common mistake: Stopping at x.

31. Mixed numbers [3]

M1 17/5 × 11/6
M1 187/30
A1 6 7/30

Common mistake: Multiplying the whole numbers and the fractions separately.

32. Household bills [3]

M1 91 × 55p = £50.05
M1 1200 × 27p = £324.00
A1 £374.05

Common mistake: Leaving the answer in pence, or adding pence to pounds.

33. Ratio problem [3]

M1 The difference is 8 − 5 = 3 parts
M1 £30 ÷ 3 = £10
A1 13 × £10 = £130

Common mistake: Dividing by the total parts. The difference is shared between the difference in parts only.

34. Reverse percentage · decrease [3]

B1 Recognises £213.50 is 70% of the original (multiplier 0.7)
M1 Divides by their multiplier: £213.50 ÷ 0.7 (or ÷ 70 × 100)
A1 £305.00

Common mistake: Taking 5% of the sale price and adding it on. The 5% was of the original, so this is always wrong.

Mark scheme: Intermediate Unit 2 (calculator)

M = method mark, A = accuracy mark (needs the method), B = independent mark. Follow through (ft) marks may be given for using your own earlier answer correctly. Answers with π use the calculator's π button; answers using π = 3.14 also get the marks.

1. Area of a circle [2]

M1 π × 20²
A1 1256.6 cm²

Common mistake: Using the diameter in πr².

2. VAT [2]

M1 £410 × 1.2, or £410 + 20% of £410
A1 £492.00

Common mistake: Taking 20% off the VAT price to remove VAT. Divide by 1.2 instead.

3. Percentage decrease [2]

M1 £110 × 0.25 (or works out 75% and takes it away)
A1 £27.50

Common mistake: Using 0.05 instead of 0.95. That gives the discount, not the sale price.

4. Bank statements [2]

M1 £425.00 + £1000.00 − £600.00 + £135.00 − £111.05
A1 £848.95

Common mistake: Adding the money out instead of subtracting it.

5. Proportion [2]

M1 180 ÷ 4 = 45 g per person
A1 45 × 9 = 405 g

Common mistake: Adding the difference instead of scaling.

6. nth term [2]

B1 4n (the sequence goes up by 4 each time)
B1 4n − 4

Common mistake: Using the first term as the number in front of n.

7. Percentage of an amount [2]

M1 £40 × 0.1 (or find 10%, 5%, 1% and build up)
A1 £4.00

Common mistake: Giving money with one decimal place. Write £0.50, never £0.5.

8. Wages [2]

M1 21 × £13.10
A1 £275.10

Common mistake: Writing £86.4 instead of £86.40.

9. Percentage profit [2]

M1 Profit ÷ cost × 100: £26.00 ÷ £260.00 × 100
A1 10%

Common mistake: Dividing by the selling price.

10. Fuel costs [3]

M1 220 ÷ 55 = 4 gallons
M1 4 × 4.5 = 18 litres
A1 18 × 139p = 2502p = £25.02

Common mistake: Pricing gallons as if they were litres. Convert to litres first.

11. Inverse proportion [2]

M1 6 × 11 = 66 builder-days
A1 66 ÷ 3 = 22 days

Common mistake: Doubling the time when you double the workers. It should halve.

12. Venn diagrams [2]

M1 A ∩ B = {12}; 1 number in both A and B
A1 1/15

Common mistake: Counting the overlap twice.

13. Sample spaces [2]

M1 36 equally likely outcomes, 4 of them work
A1 4/36 = 1/9

Common mistake: Thinking there are 12 outcomes because there are two dice.

14. Scatter graphs [2]

M1 Reads up from x = 5 to the line of best fit
A1 About 4.4 (a sensible reading)

Common mistake: Reading from the nearest point instead of the line.

15. Estimating [2]

M1 800 × 5 ÷ 0.1
A1 40,000

Common mistake: Working out the exact answer. An estimate must show the rounded numbers.

16. Similar shapes [2]

M1 20 ÷ 8 = 2.5
A1 11 × 2.5 = 27.5 cm

Common mistake: Adding the difference instead of multiplying.

17. Time zones [2]

M1 11:00 + 8 h 50 min = 19:50 UK time
A1 19:50 + 4 hours = 23:50

Common mistake: Adding the difference for a place that is behind the UK.

18. Mutually exclusive events [2]

M1 0.21 + 0.24 (they can't both happen, so add)
A1 0.45

Common mistake: Multiplying. That is for independent events happening together.

19. Surface area [2]

M1 24, 48 and 32 cm^2, two of each
A1 208 cm^2

Common mistake: Working out the volume. Surface area is the area of all the faces.

20. Volume of a cylinder [2]

M1 $\pi \times 6^2 \times 3$
A1 339.3 cm^3

Common mistake: Using the diameter instead of the radius.

21. Comparing distributions [2]

B1 Year 10 did better on average, because their median is higher
B1 Year 10's results were more consistent, because their range is smaller

Common mistake: Saying a bigger range is "better". A smaller range means more consistent.

22. Payslips [2]

M1 £658.46
A1 £2800.00 − £658.46 = £2141.54

Common mistake: Taking off only the tax.

23. Using a calculator [2]

B1 1.0542243...
B1 1.05

Common mistake: Rounding in the middle of the calculation. Only round at the very end.

24. Estimating the mean [3]

M1 Uses midpoints 10, 30, 50, 70
M1 1580 ÷ 36
A1 43.89 minutes

Common mistake: Using the end of each group instead of the midpoint.

25. Compound area [3]

M1 $10 \times 14 - 4 \times 5$ (or two rectangles)
M1 Missing lengths 4 cm and 5 cm
A1 120 cm^2

Common mistake: Missing out the two sides you had to work out.

26. Elevation and depression [3]

M1 $\tan 52° = h/35$
M1 $h = 35 \times \tan 52°$
A1 44.8 m

Common mistake: Measuring the angle from the vertical instead of the horizontal.

27. Mean from a table [3]

M1 Multiplies each value by its frequency: 1×6 + 2×2 + 3×2 + 4×6 + 5×4 + 6×5
M1 90 ÷ 25
A1 3.6

Common mistake: Dividing by the number of rows in the table.

28. Tree diagrams [3]

B1 No rain: 0.8 and 0.4
M1 $0.2 \times 0.4 + 0.8 \times 0.6$
A1 0.56

Common mistake: Forgetting one of the routes for "exactly one".

29. Area of a sector [3]

M1 270/360
M1 $\pi \times 11^2$
A1 285.1 cm^2

Common mistake: Forgetting the angle/360 and working out the whole circle.

30. Trigonometry [3]

M1 Uses tan
M1 x = 11 ÷ tan 66°
A1 4.9 cm

Common mistake: Calculator in radians. Check you see a D on the screen.

31. Volume of a prism [3]

M1 ½ × (90 + 45) × 15 = 1012.5 cm^2
M1 1012.5 × 180 = 182,250 cm^3
A1 182,250 ÷ 1000 = 182.25 litres

Common mistake: Leaving the answer in cm^3 when the question asks for litres.

32. Pythagoras [3]

M1 $11^2 + 11^2 = 242$
M1 √242
A1 15.6 cm

Common mistake: Forgetting to square root at the end.

33. Budgeting [3]

M1 Spends £1107
M1 £1400 − £1107 = £293
A1 293 ÷ 1400 × 100 = 20.9%

Common mistake: Finding the percentage spent when the question asks for what is left.

34. Trigonometry [3]

M1 tan x = 7/15
M1 $\tan^{-1}(7 \div 15)$
A1 25.0°

Common mistake: Using tan instead of $\tan^{-1}$ when finding an angle.

Mark scheme: Higher Unit 1 (non-calculator)

M = method mark, A = accuracy mark (needs the method), B = independent mark. Follow through (ft) marks may be given for using your own earlier answer correctly. Answers with π use the calculator's π button; answers using π = 3.14 also get the marks.

1. Estimating [2]

M1 5 × 40 ÷ 8
A1 25

Common mistake: Working out the exact answer. An estimate must show the rounded numbers.

2. Changing the subject [2]

M1 A correct first step, e.g. y/2 = x + 1
A1 x = y/2 − 1 (or any correct equivalent)

Common mistake: Doing the steps in the wrong order: undo + and − before × and ÷.

3. Payslips [2]

M1 £552.72
A1 £2350.00 − £552.72 = £1797.28

Common mistake: Taking off only the tax.

4. Currency [2]

M1 £100 × 1.26
A1 $126.00

Common mistake: Dividing when changing pounds to euros.

5. Map scales [2]

M1 6 km = 600,000 cm
A1 ÷ 25,000 = 24 cm

Common mistake: Dividing km by the scale without changing to cm first.

6. Scatter graphs [2]

M1 Reads up from x = 2.5 to the line of best fit
A1 About 4.8 (a sensible reading)

Common mistake: Reading from the nearest point instead of the line.

7. Sample spaces [2]

M1 36 equally likely outcomes, 15 of them work
A1 15/36 = 5/12

Common mistake: Thinking there are 12 outcomes because there are two dice.

8. Mutually exclusive events [2]

M1 0.17 + 0.38 (they can't both happen, so add)
A1 0.55

Common mistake: Multiplying. That is for independent events happening together.

9. Cumulative frequency [2]

M1 Reads across at 38.5 (half of 77)
A1 About 32 minutes

Common mistake: Reading across from the middle of the axis value, not half the total frequency.

10. Mortgages [3]

M1 20 × 12 = 240 payments
M1 240 × £600 = £144,000
A1 £144,000 − £100,000 = £44,000

Common mistake: Forgetting to multiply the years by 12.

11. Estimating the mean [3]

M1 Uses midpoints 5, 15, 25, 35
M1 865 ÷ 41
A1 21.1 minutes

Common mistake: Using the end of each group instead of the midpoint.

12. Ratio problem [3]

M1 The difference is 6 − 1 = 5 parts
M1 £30 ÷ 5 = £6
A1 7 × £6 = £42

Common mistake: Dividing by the total parts. The difference is shared between the difference in parts only.

13. Mean from a table [3]

M1 Multiplies each value by its frequency: 2×9 + 3×1 + 4×3 + 5×7
M1 68 ÷ 20
A1 3.4

Common mistake: Dividing by the number of rows in the table.

14. Overtime [3]

M1 38 × £14.40 = £547.20
M1 4 × £14.40 × 1.5 = £86.40
A1 £633.60

Common mistake: Paying all the hours at time and a half.

15. Reverse percentage · decrease [3]

B1 Recognises £228.75 is 75% of the original (multiplier 0.75)
M1 Divides by their multiplier: £228.75 ÷ 0.75 (or ÷ 75 × 100)
A1 £305.00

Common mistake: Taking 5% of the sale price and adding it on. The 5% was of the original, so this is always wrong.

16. AER and APR [1]

B1 APR

Common mistake: Mixing them up. Savers look at AER, borrowers look at APR.

17. Area scale factor [2]

M1 Area scale factor $5^2 = 25$
A1 875 cm^2

Common mistake: Multiplying the area by k instead of k^2.

18. Pressure [2]

M1 15 × 8
A1 120 N

Common mistake: Multiplying force by area.

19. Standard form [2]

M1 Writes both with the same power of 10 (or as ordinary numbers) before adding
A1 3.66×10^5

Common mistake: Adding the front numbers and the powers separately. That only works for multiplying.

20. Adding surds [2]

M1 $\sqrt{180} = 6\sqrt{5}$ and $\sqrt{20} = 2\sqrt{5}$
A1 $8\sqrt{5}$

Common mistake: Adding under the roots: $\sqrt{2} + \sqrt{8}$ is not $\sqrt{10}$.

21. Stratified sampling [2]

M1 $180/800 \times 50$
A1 11

Common mistake: Sharing the sample equally between the groups.

22. Histograms [2]

M1 Class width 10
A1 $28 \div 10 = 2.8$

Common mistake: Reading the height of the bar as the frequency. In a histogram, area is frequency.

23. Rates of change [2]

M1 $(8 - 4) \div (3 - 2)$
A1 4 m/s

Common mistake: Finding the gradient from the origin, which is the average rate.

24. Recurring decimals [2]

M1 $100x - x = 50$, so $99x = 50$
A1 $50/99$

Common mistake: Multiplying by 10 when two digits repeat. Use 10 to the number of repeating digits.

25. Volume scale factor [2]

M1 Volume scale factor $3^3 = 27$
A1 405 cm^3

Common mistake: Using k^2 for volume.

26. Combined mean [3]

M1 $18 \times 70 = 1260$ and $22 \times 68 = 1496$
M1 $2756 \div 40$
A1 68.9

Common mistake: Averaging the two means. That only works if the groups are the same size.

27. Trapezium rule [3]

B1 Strip width $h = 2$
M1 $2/2 \times [5 + 2 \times (10 + 6 + 11) + 16] = 2/2 \times 75$
A1 75 m

Common mistake: Forgetting to double the middle values, or using h instead of h/2.

28. Without replacement [3]

M1 Second-pick probabilities out of 8, e.g. 2/8
M1 $3/9 \times 2/8$
A1 $6/72 = 1/12$

Common mistake: Keeping the same bottom number for the second pick.

29. Velocity-time graphs [3]

M1 Distance = area under the graph
M1 ½ × 10 × 16 + 20 × 16 + ½ × 10 × 16
A1 480 m

Common mistake: Using the gradient. That gives acceleration, not distance.

30. At least one [3]

M1 P(not) = 7/10
M1 $(7/10)^2 = 49/100$
A1 1 − 49/100 = 51/100

Common mistake: Listing every way to get at least one. It is long and easy to miss one. Use 1 − P(none).

31. Similar shapes [3]

M1 225 ÷ 36 = 25/4
M1 √(25/4) = 5/2
A1 2 × 5/2 = 5 cm

Common mistake: Using the area scale factor on a length.

32. Proportion [3]

M1 $y = k\sqrt{x}$
A1 k = 3
A1 y = 9

Common mistake: Using y = kx when the question says square root.

33. Take-home pay [4]

M1 (£27,800 − £12,570) × 0.2 = £3,046.00
M1 (£27,800 − £12,570) × 0.08 = £1,218.40
M1 £27,800 − their tax − their NI
A1 £23,535.60

Common mistake: Forgetting the National Insurance.

Mark scheme: Higher Unit 2 (calculator)

M = method mark, A = accuracy mark (needs the method), B = independent mark. Follow through (ft) marks may be given for using your own earlier answer correctly. Answers with π use the calculator's π button; answers using π = 3.14 also get the marks.

1. Expected outcomes [2]

M1 3/25 × 100
A1 12

Common mistake: Dividing by the probability instead of multiplying.

2. Bearings [2]

M1 270 − 080 = 190°
A1 170° (the smaller angle: 360 − 190)

Common mistake: Adding the bearings instead of finding the difference.

3. Time zones [2]

M1 12:40 + 2 h 35 min = 15:15 UK time
A1 15:15 + 4 hours = 19:15

Common mistake: Adding the difference for a place that is behind the UK.

4. LCM in context [2]

M1 LCM of 15 and 36 = 180 minutes
A1 13:00 am

Common mistake: Giving the LCM in minutes when the question asks for the time of day.

5. Venn diagrams [2]

M1 A ∩ B = {none}; 12 numbers in neither A nor B
A1 12/20 = 3/5

Common mistake: Counting the overlap twice.

6. Volume of a cylinder [2]

M1 $\pi \times 10^2 \times 5$
A1 1570.8 cm^3

Common mistake: Using the diameter instead of the radius.

7. Using a calculator [2]

B1 1.3786252...
B1 1.38

Common mistake: Rounding in the middle of the calculation. Only round at the very end.

8. Inverse proportion [2]

M1 5 × 20 = 100 builder-days
A1 100 ÷ 4 = 25 days

Common mistake: Doubling the time when you double the workers. It should halve.

9. Travel graphs [2]

M1 25 km in 60 minutes
A1 25 ÷ 1 = 25 km/h

Common mistake: Using minutes instead of hours for km/h.

10. Upper and lower bounds [2]

M1 Upper bounds 25.5 and 12.5
A1 2 × 25.5 + 2 × 12.5 = 76 cm

Common mistake: Using the measurements as given. Bounds questions need the bounds in the calculation.

11. Similar shapes [2]

M1 10.5 ÷ 7 = 1.5
A1 8 × 1.5 = 12 cm

Common mistake: Adding the difference instead of multiplying.

12. Compound interest [3]

B1 1.045^2 = 1.092025
M1 £7,750 × their multiplier
A1 £8,463.19

Common mistake: Using simple interest (adding the same amount each year).

13. Elevation and depression [3]

M1 tan 44° = h/35
M1 h = 35 × tan 44°
A1 33.8 m

Common mistake: Measuring the angle from the vertical instead of the horizontal.

14. Budgeting [3]

M1 Spends £978
M1 £2350 − £978 = £1372
A1 1372 ÷ 2350 × 100 = 58.4%

Common mistake: Finding the percentage spent when the question asks for what is left.

15. Proportion [3]

M1 $y = kx^2$
A1 k = 6
A1 y = 726

Common mistake: Forgetting to square x (or cube, or root it) when you find k.

16. Compound units [2]

M1 26 × 3600 = 93,600 m per hour
A1 93.6 km/h

Common mistake: Only doing one of the two conversions.

17. Cones and spheres [2]

M1 $\frac{1}{3} \times \pi \times 5^2 \times 7$
A1 183.3 cm^3

Common mistake: Mixing up slant height and perpendicular height.

18. Area of a triangle [2]

M1 ½ × 11 × 11 × sin 35°
A1 34.7 cm^2

Common mistake: Using an angle that is not between the two sides.

19. Arc length [2]

M1 $210/360 \times 2 \times \pi \times 7 = 25.7$
A1 25.7 cm

Common mistake: Using πr^2, which gives an area, not a length.

20. Simplifying surds [2]

B1 Takes out a square factor, but not the largest one
B1 $\sqrt{250} = \sqrt{25} \times \sqrt{10} = 5\sqrt{10}$

Common mistake: Taking out a square factor that is not the biggest, which leaves it not fully simplified.

21. Bounds with subtraction [2]

M1 Smallest minus biggest: $49.5 - 14.5$
A1 35 cm

Common mistake: Subtracting lower bound − lower bound. That is neither the biggest nor the smallest.

22. A* stretch · compound depreciation [3]

B1 Multiplier for 2 years: $0.95^2 = 0.9025$
M1 Divides by their multiplier: £8303.00 ÷ 0.9025
A1 £9200.00

Common mistake: Using 5% × n (simple). Depreciation compounds, so use a power.

23. Sine rule [3]

M1 $x / \sin 45° = 6 / \sin 40°$
M1 $x = 6 \times \sin 45° \div \sin 40°$
A1 6.6 cm

Common mistake: Pairing a side with an angle that is not opposite it.

24. A* stretch · compound interest [3]

B1 Multiplier for 2 years: $1.03^2 = 1.0609$
M1 Divides by their multiplier: £6895.85 ÷ 1.0609
A1 £6500.00

Common mistake: Multiplying instead of dividing when the question gives you the final amount.

25. Cosine rule [3]

M1 $x^2 = 7^2 + 9^2 - 2 \times 7 \times 9 \times \cos 60°$
M1 $x^2 = 67.00$
A1 8.2 cm

Common mistake: Typing it in so the calculator does $b^2 + c^2 - 2bc$ first and then multiplies by cos A. Use brackets or do it in parts.

26. A* stretch · increase then decrease [3]

B1 Combined multiplier: $1.3 \times 0.95 = 1.235$
M1 Divides by their combined multiplier: £963.30 ÷ 1.235
A1 £780.00

Common mistake: Thinking up 5% then down 5% cancels out. It does not: $1.05 \times 0.95 = 0.9975$.

27. Bounds with division [3]

B1 Lower bound of distance: 455 m
B1 Upper bound of time: 14.05 s (dividing by a smaller time gives a bigger speed)
B1 $455 \div 14.05 = 32.4$ m/s

Common mistake: Using the upper bound of both. Dividing by a bigger number makes the answer smaller.

28. Working backwards [3]

M1 $\pi \times r^2 \times 5 = 1570.8$
M1 $r^2 = 1570.8 \div (\pi \times 5) = 100.00$
A1 $r = 10.0$ cm

Common mistake: Forgetting the square root at the end.

29. 3D Pythagoras [3]

M1 $\sqrt{(8^2 + 4^2)} = 8.9$
M1 $\sqrt{(8^2 + 4^2 + 7^2)}$
A1 11.4 cm

Common mistake: Rounding the base diagonal too early.

30. Comparing savings [3]

M1 £8,500 + 4 × 4% of £8,500 = £9,860.00
M1 £8,500 × 1.05^4 = £10,331.80
A1 Account B, with both totals correct

Common mistake: Picking the higher rate without checking: compound can beat a higher simple rate.

31. Cosine rule [3]

M1 $\cos x = (11^2 + 11^2 - 8^2) \div (2 \times 11 \times 11)$
M1 $\cos x = 0.7355$, $x = \cos^{-1}(...)$
A1 42.6°

Common mistake: Putting the wrong side as a. It must be the side opposite the angle you want.

32. Area of a segment [4]

M1 $120/360 \times \pi \times 11^2 = 126.711...$
M1 $\frac{1}{2} \times 11 \times 11 \times \sin 120° = 52.395...$
M1 126.711... − 52.395... (keep the full values, round at the end)
A1 74.3 cm^2

Common mistake: Forgetting to take the triangle away.

Want help before January?

If you've marked a paper and you're not sure how to close the gap, I tutor resit students online: 1-to-1, built around exactly the marks you're dropping. Book a free 15-minute chat first, no commitment.

tamzmaths.co.uk/tutoring

Keep going, free

Every topic in this pack has free practice on TamzMaths: fresh numbers every time, marked step by step like the real exam, with a hint aimed at your exact mistake.

tamzmaths.co.uk

This pack is free. Share it with anyone resitting. Made by Tamz, a maths student from Cardiff who missed an A* in his own GCSE by one mark. TamzMaths is independent and not affiliated with or endorsed by WJEC.